www.keyliteroofwindows.com/fitting-instructions

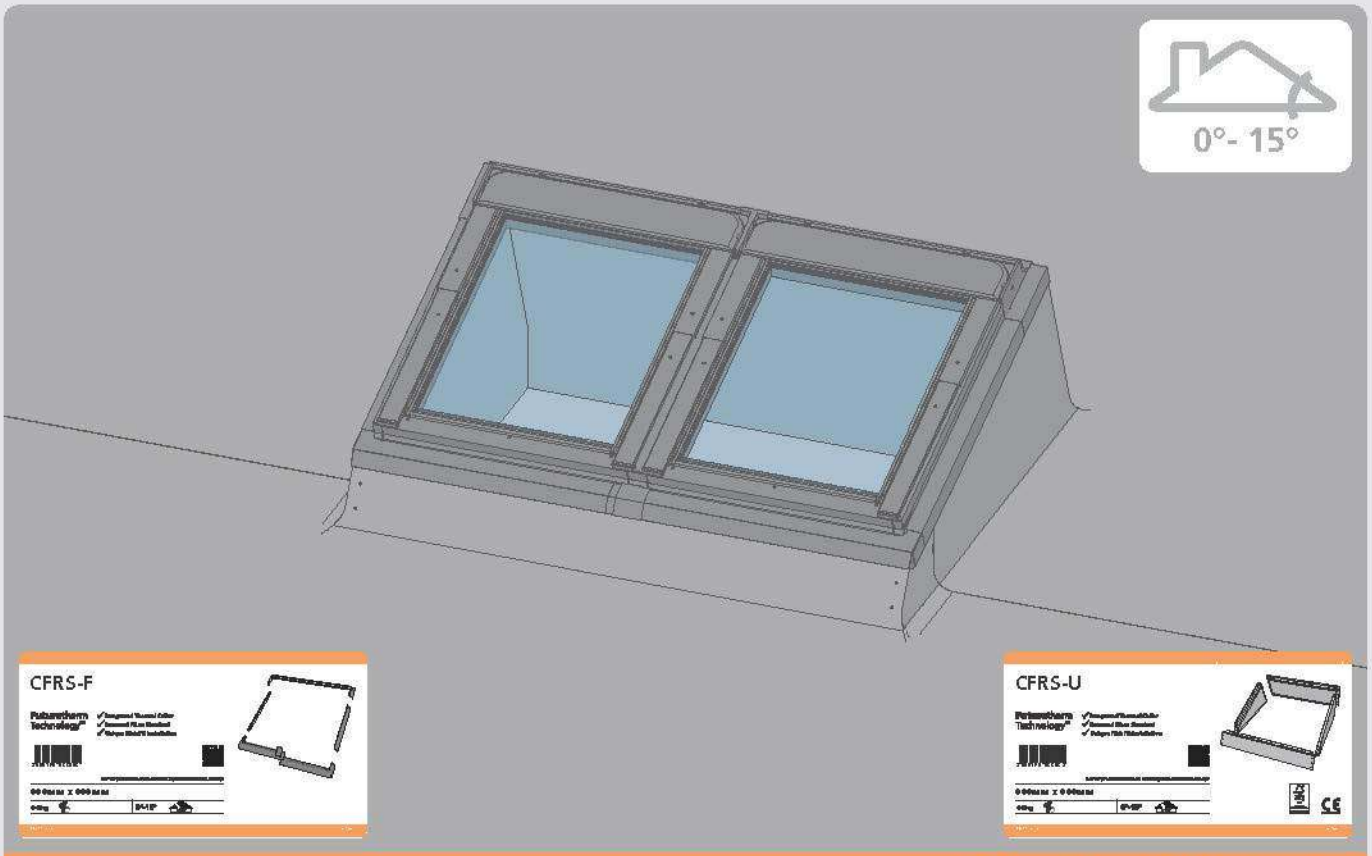

Futuretherm Technology™

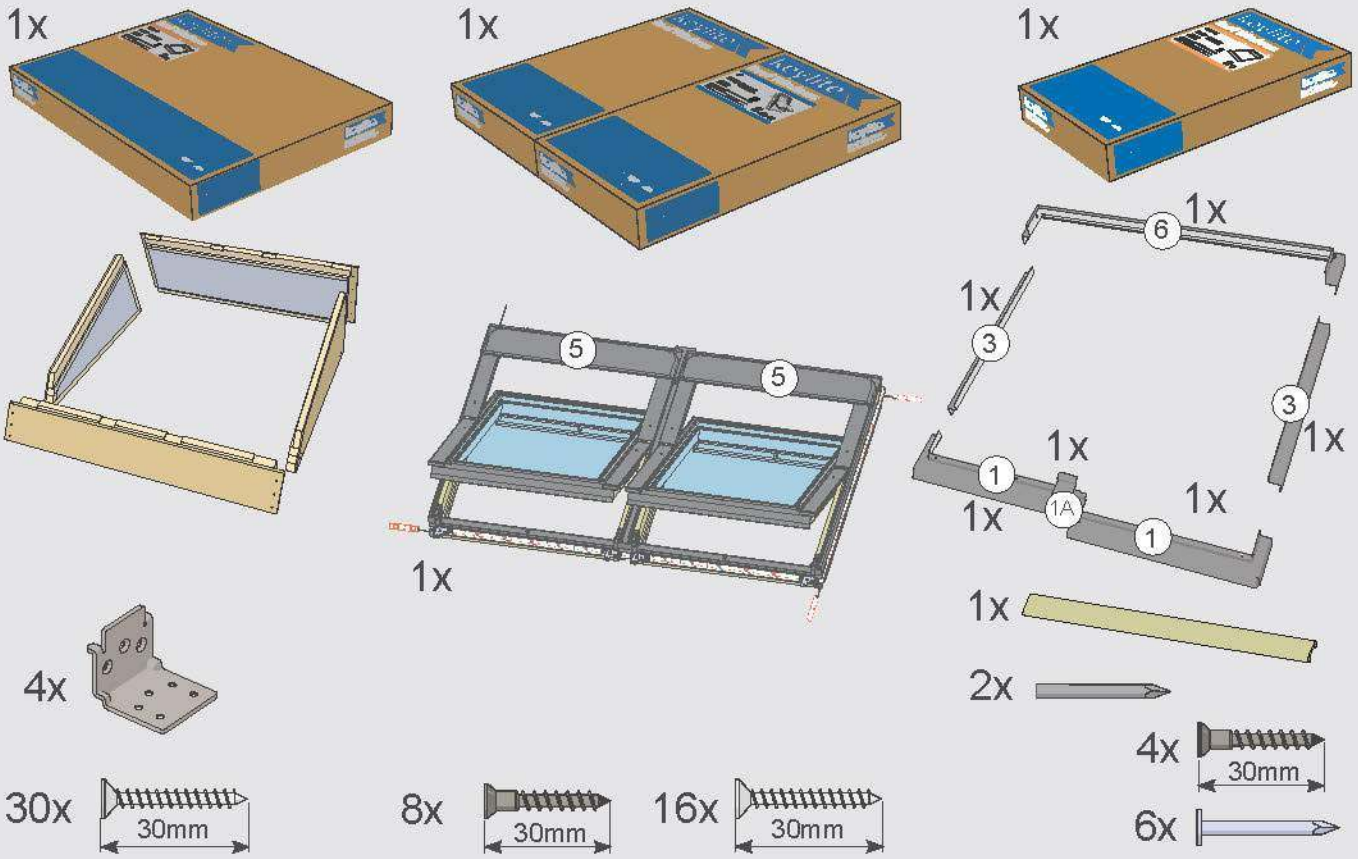

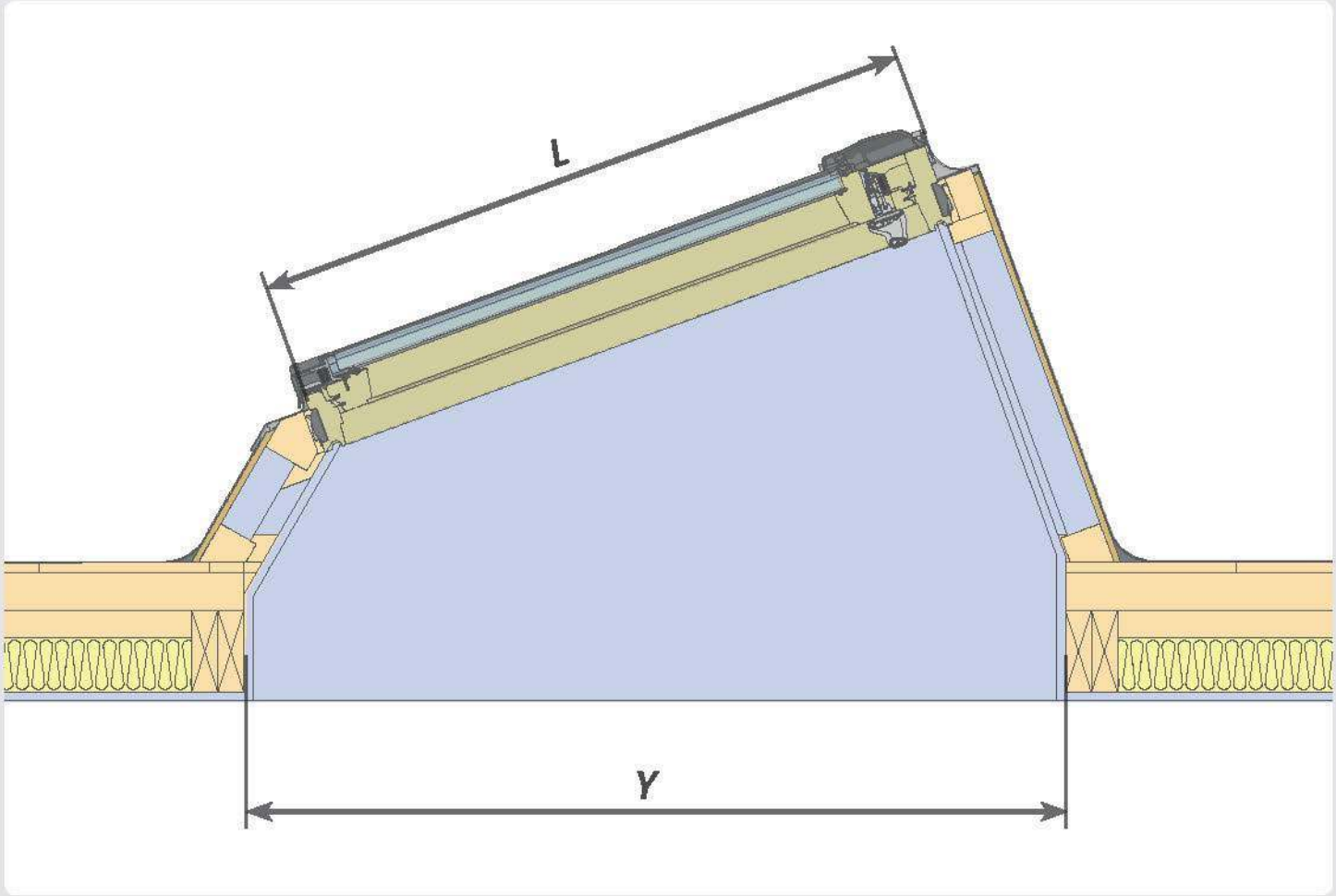
L
Y

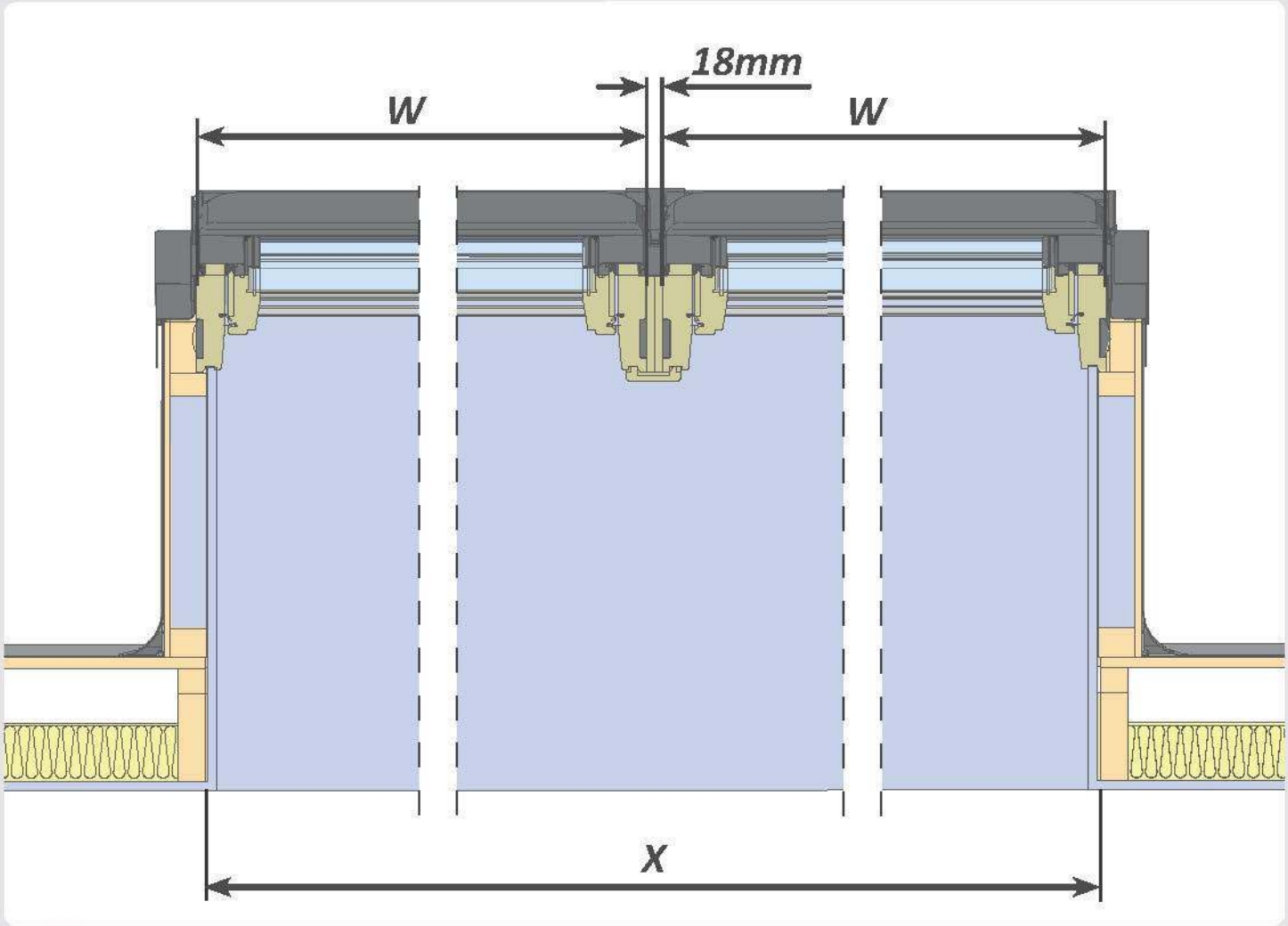
18mm
W
W
X

1

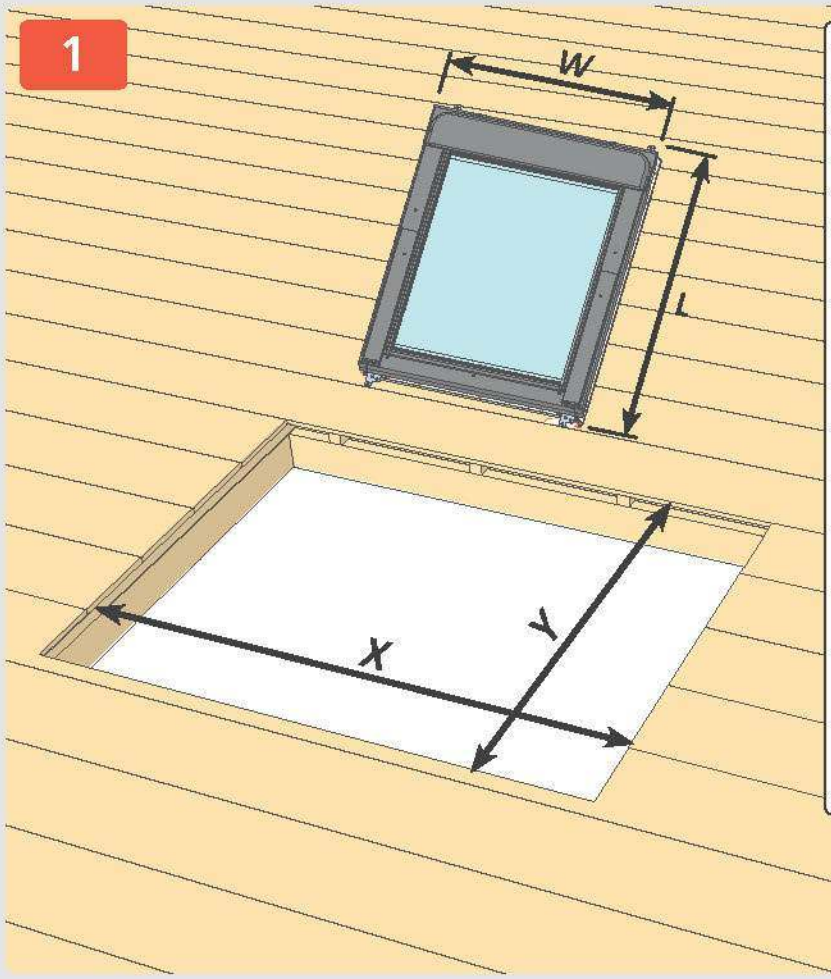

	W x L	X x Y
CFRS-CP-01	550 x 780	1088 x 1000
CFRS-CP-02	550 x 980	1088 x 1200
CFRS-CP-03	660 x 1180	1308 x 1400
CFRS-CP-04	780 x 980	1548 x 1200
CFRS-CP-05	780 x 1180	1548 x 1400
CFRS-CP-06	780 x 1400	1548 x 1620
CFRS-CP-07	940 x 1600	1868 x 1820
CFRS-CP-08	1140 x 1180	2268 x 1400
CFRS-CP-09	1340 x 980	2668 x 1200
CFRS-CP-10	1340 x 1400	2668 x 1620

2

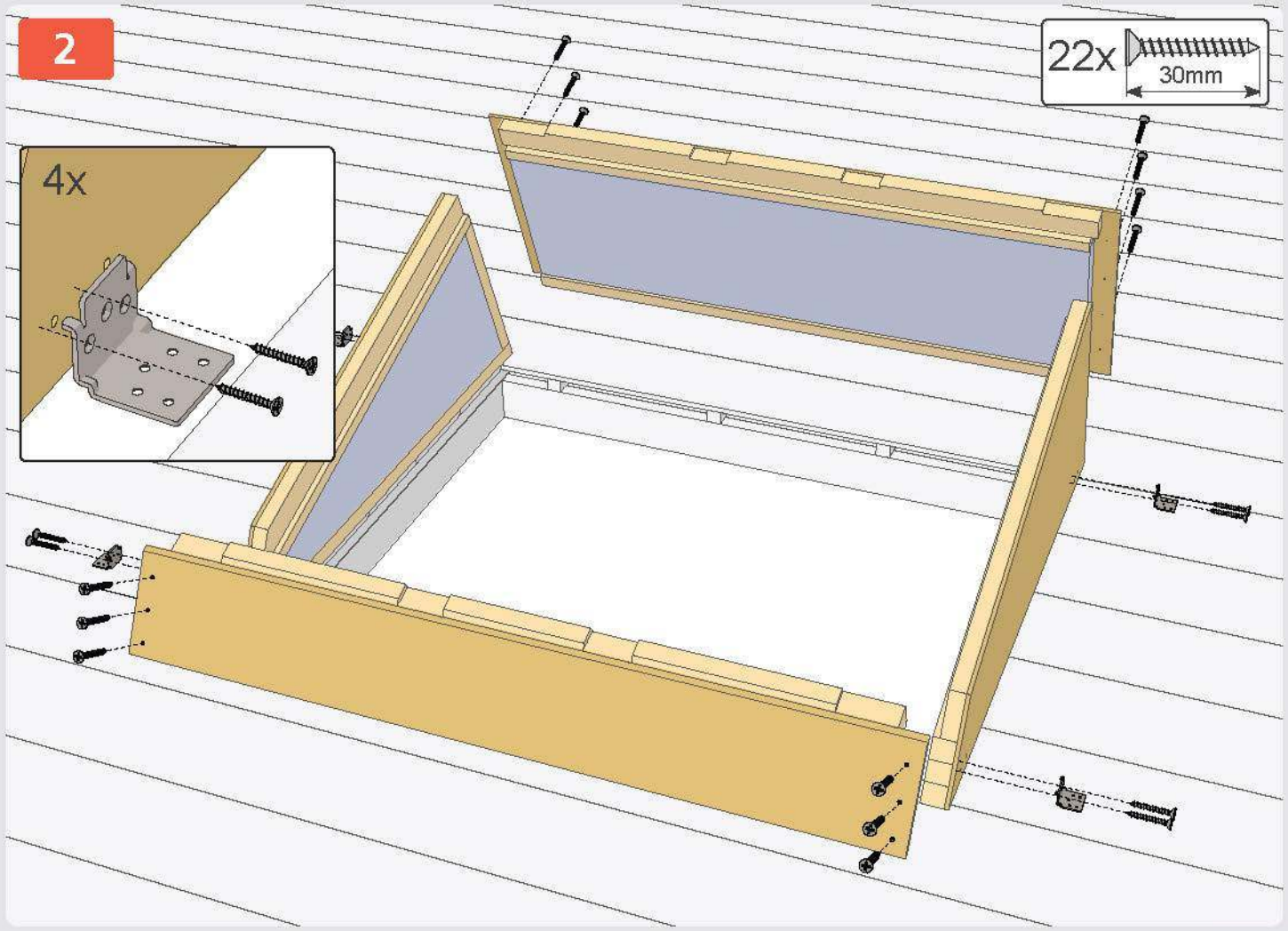

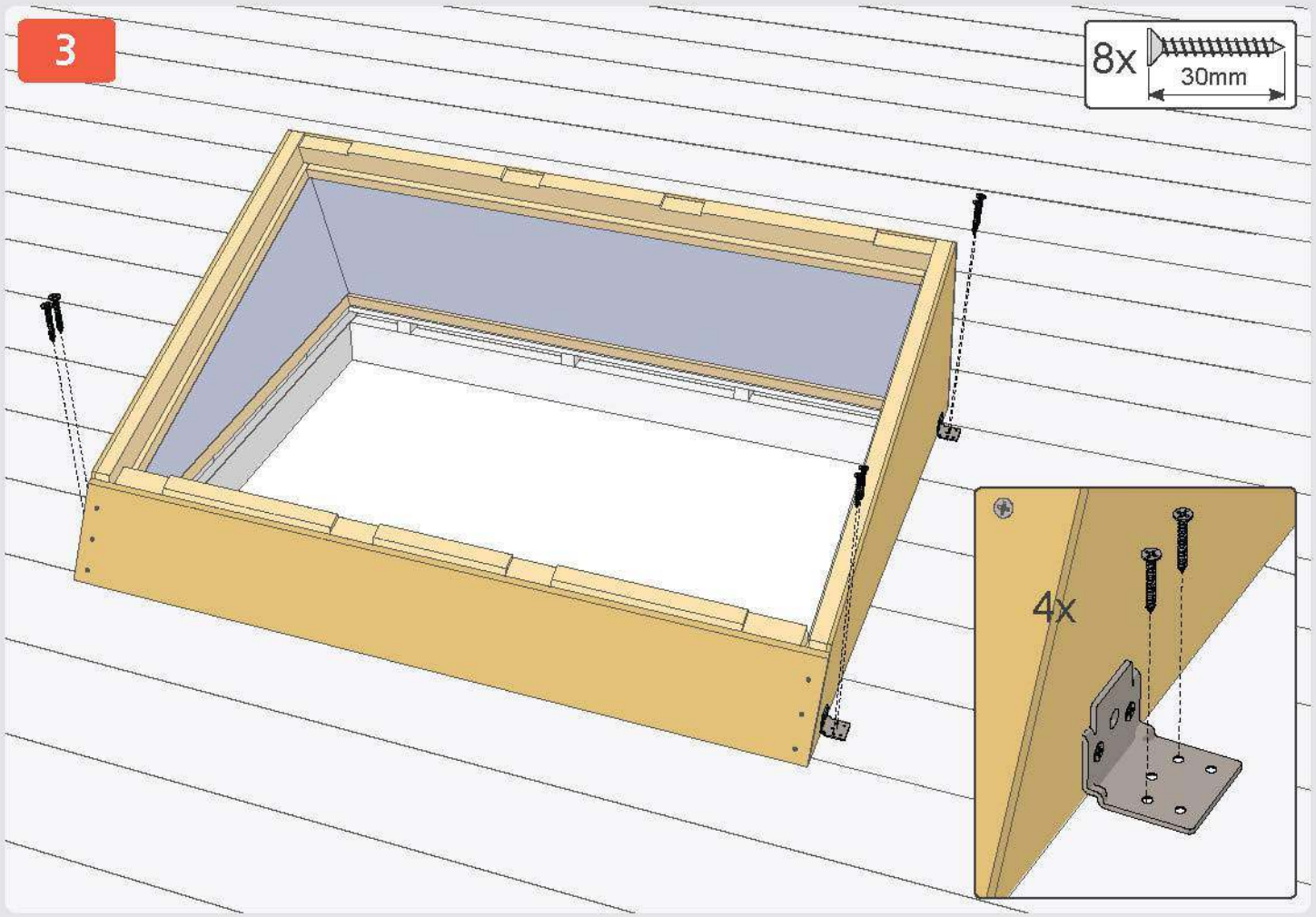

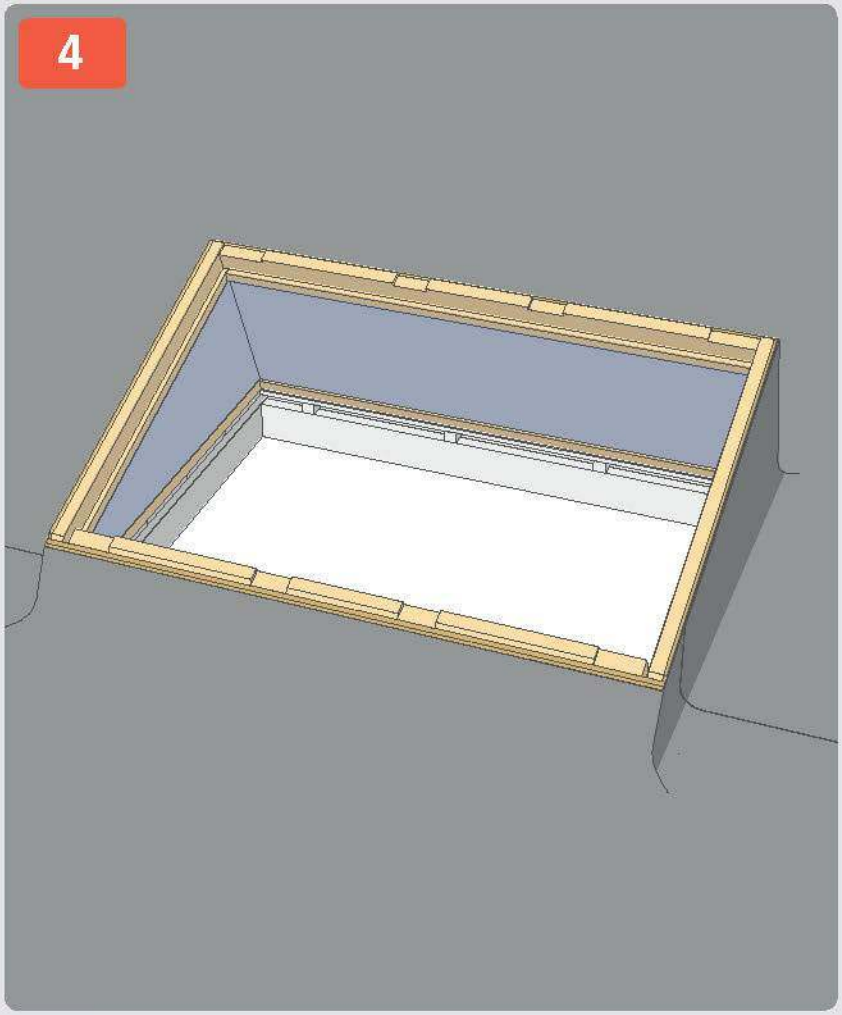

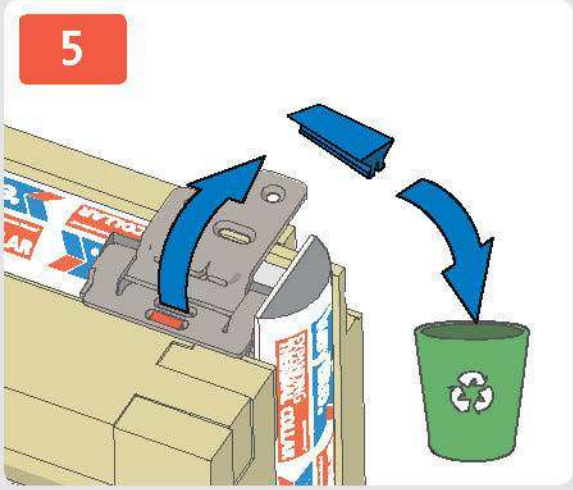

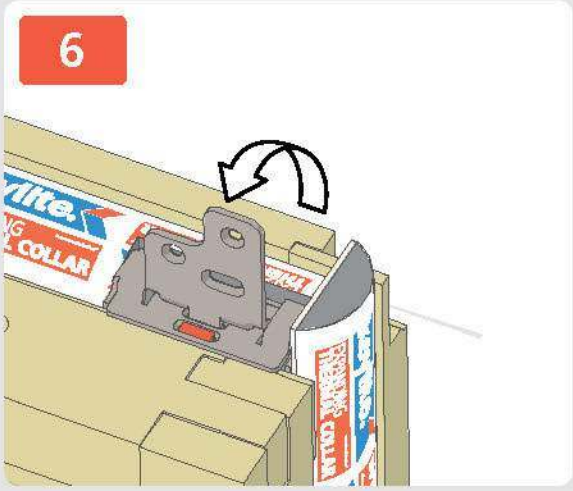

keylite.

7

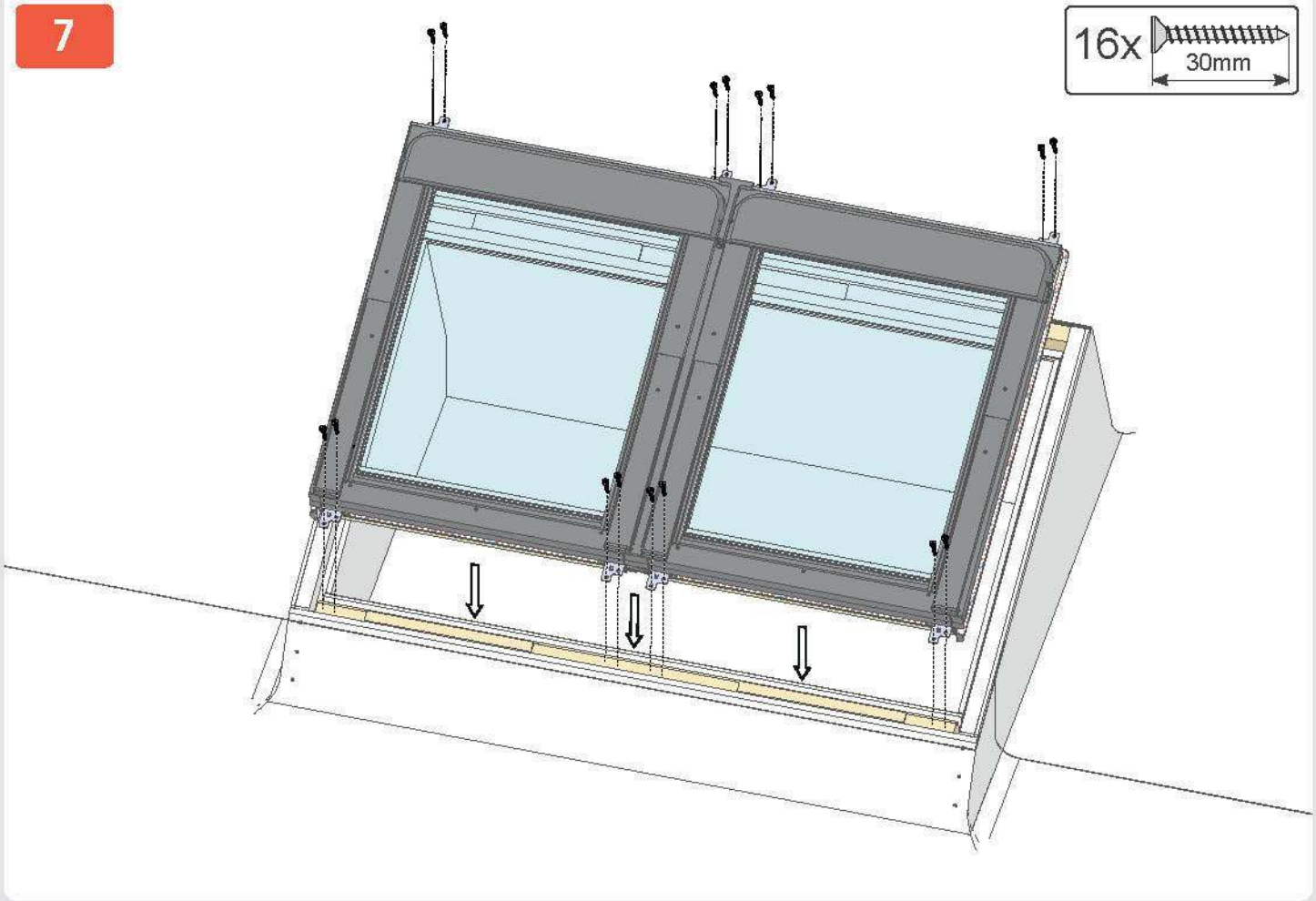

8

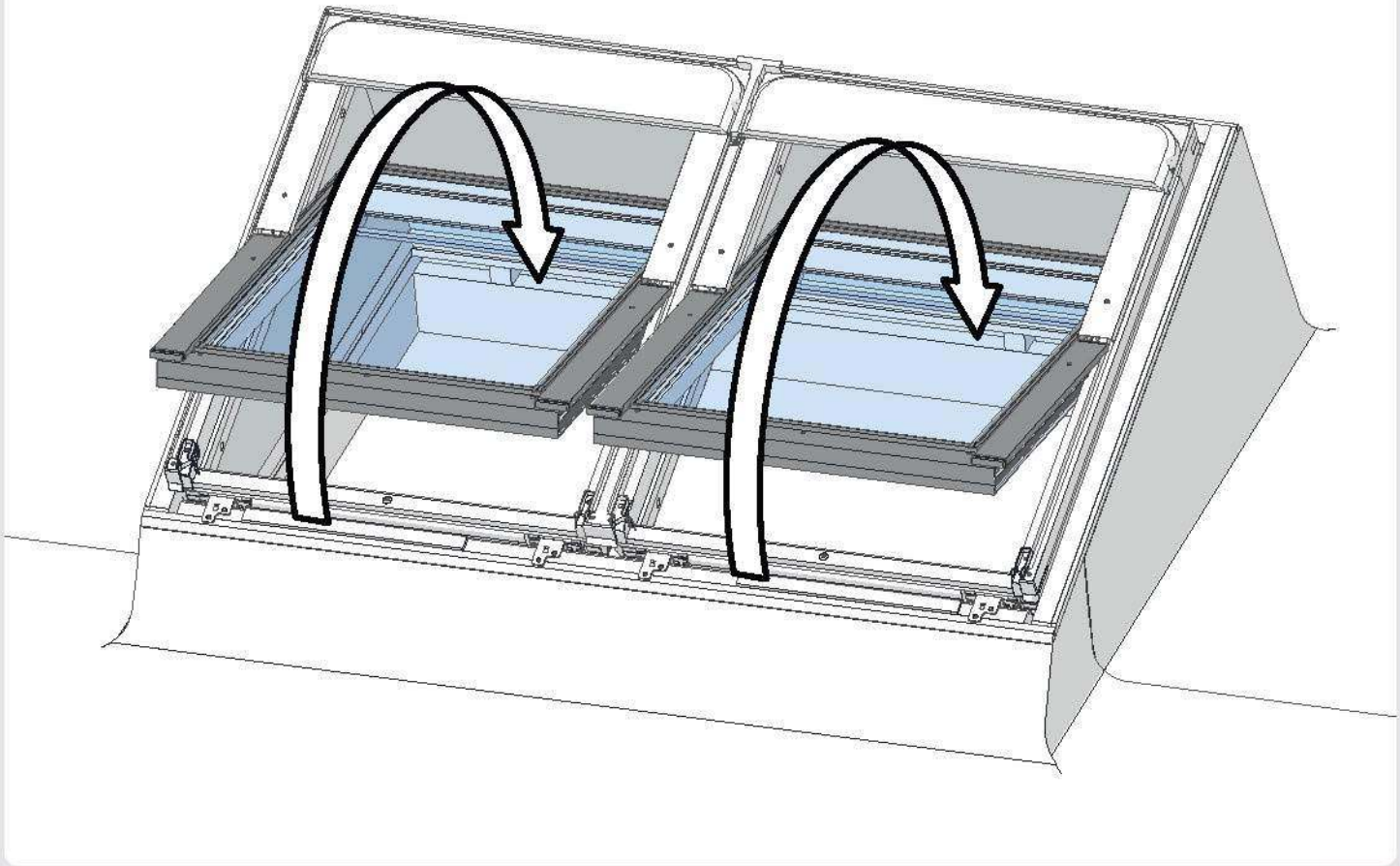

9

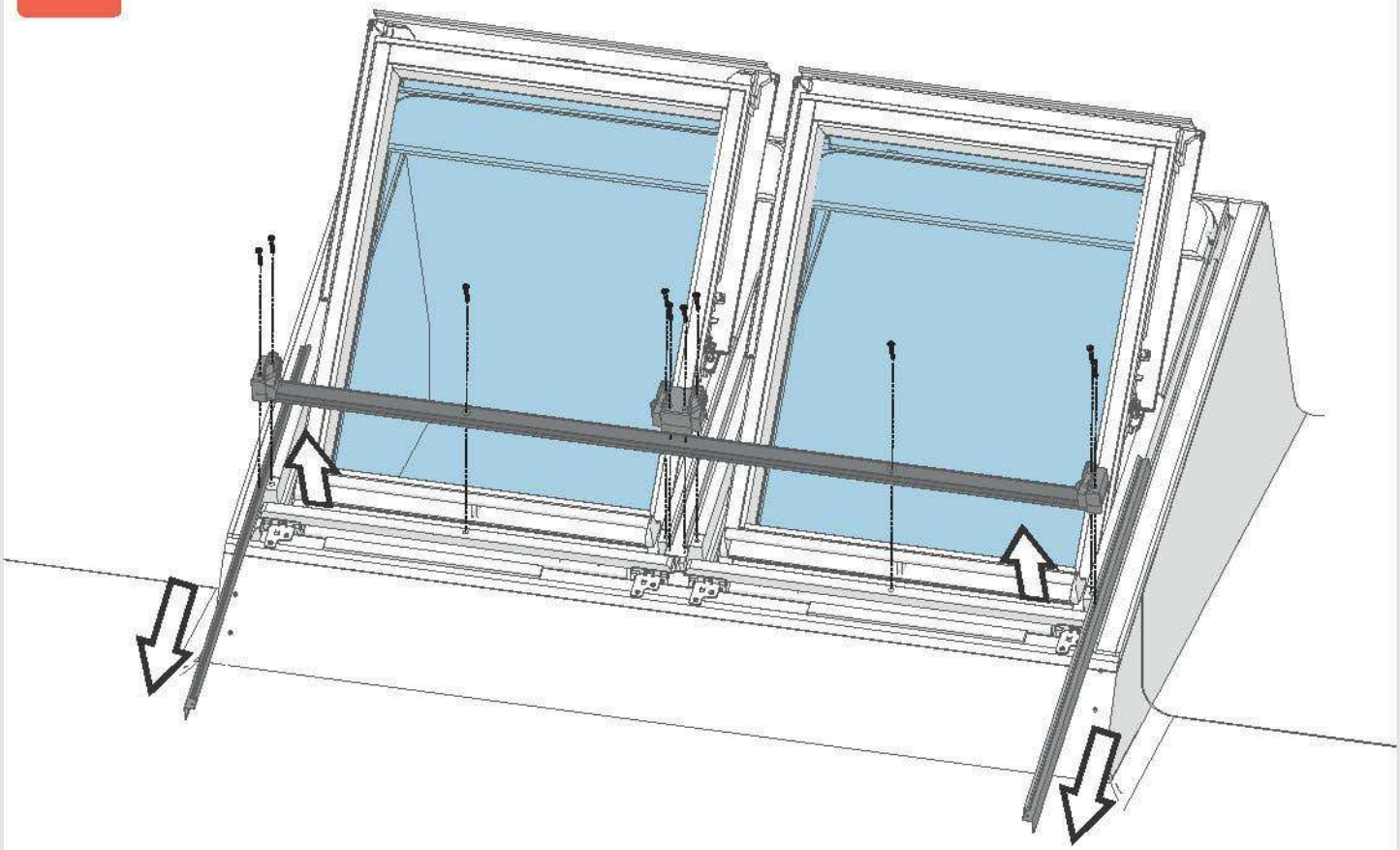

10

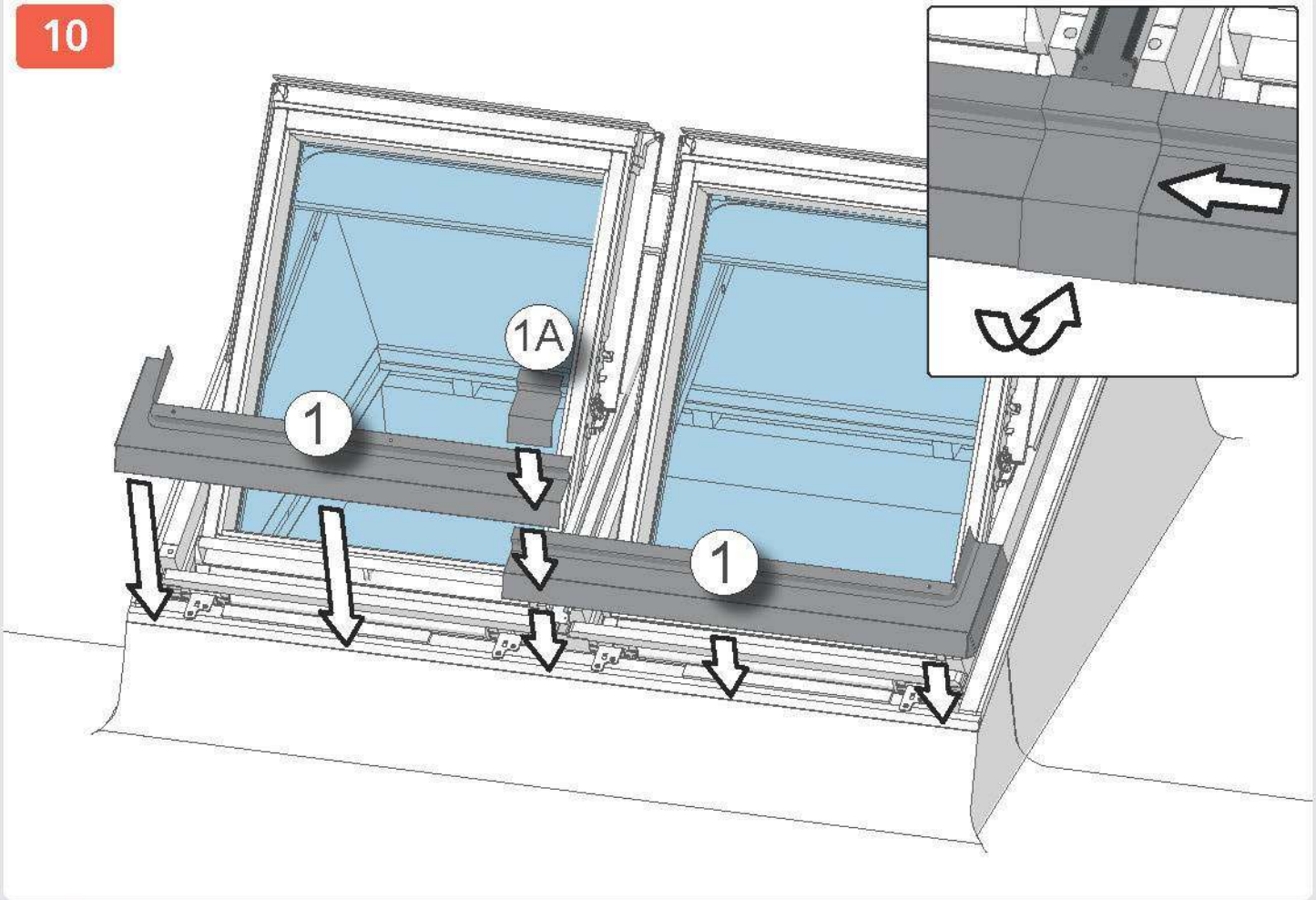

keylite.

11

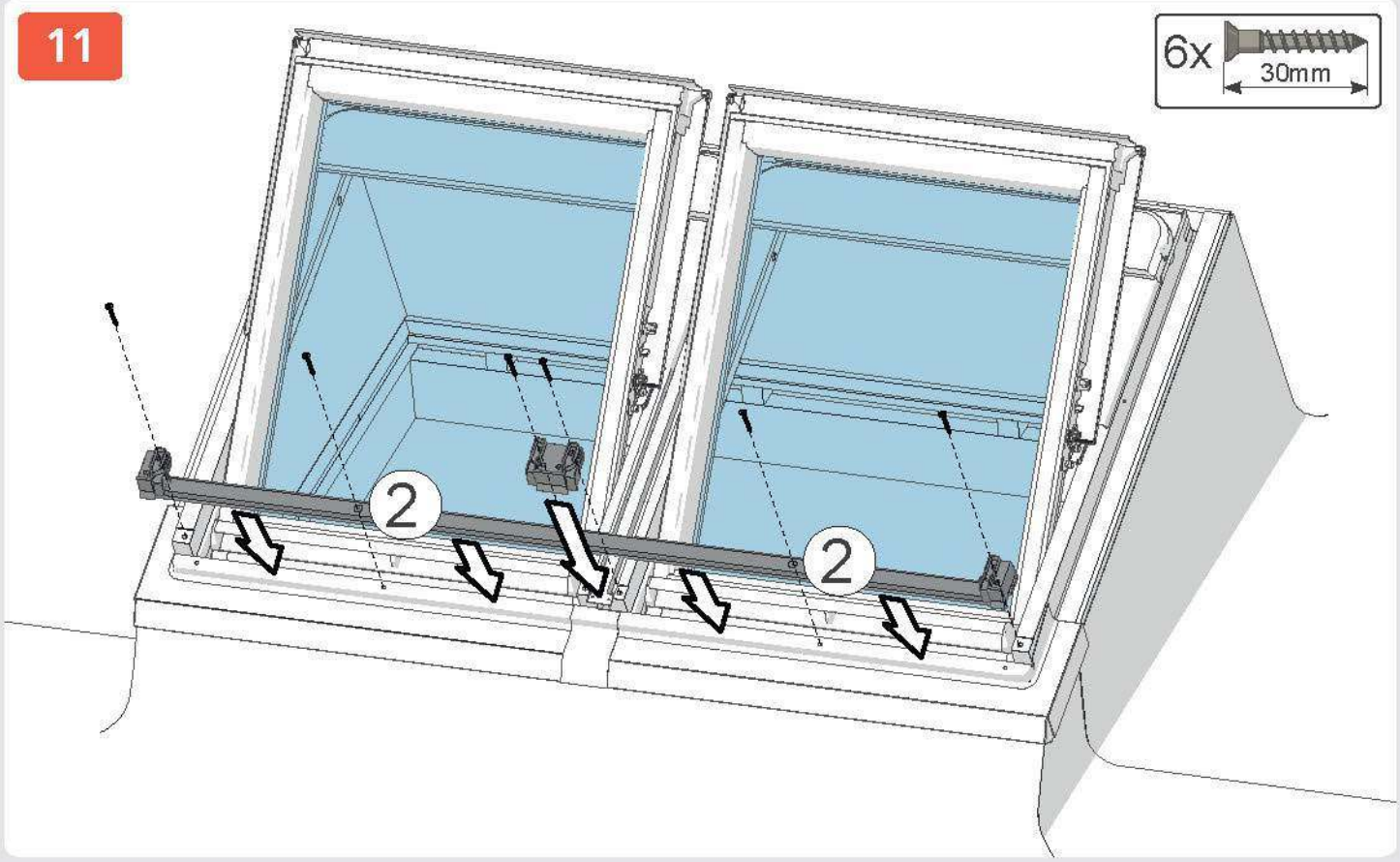

12

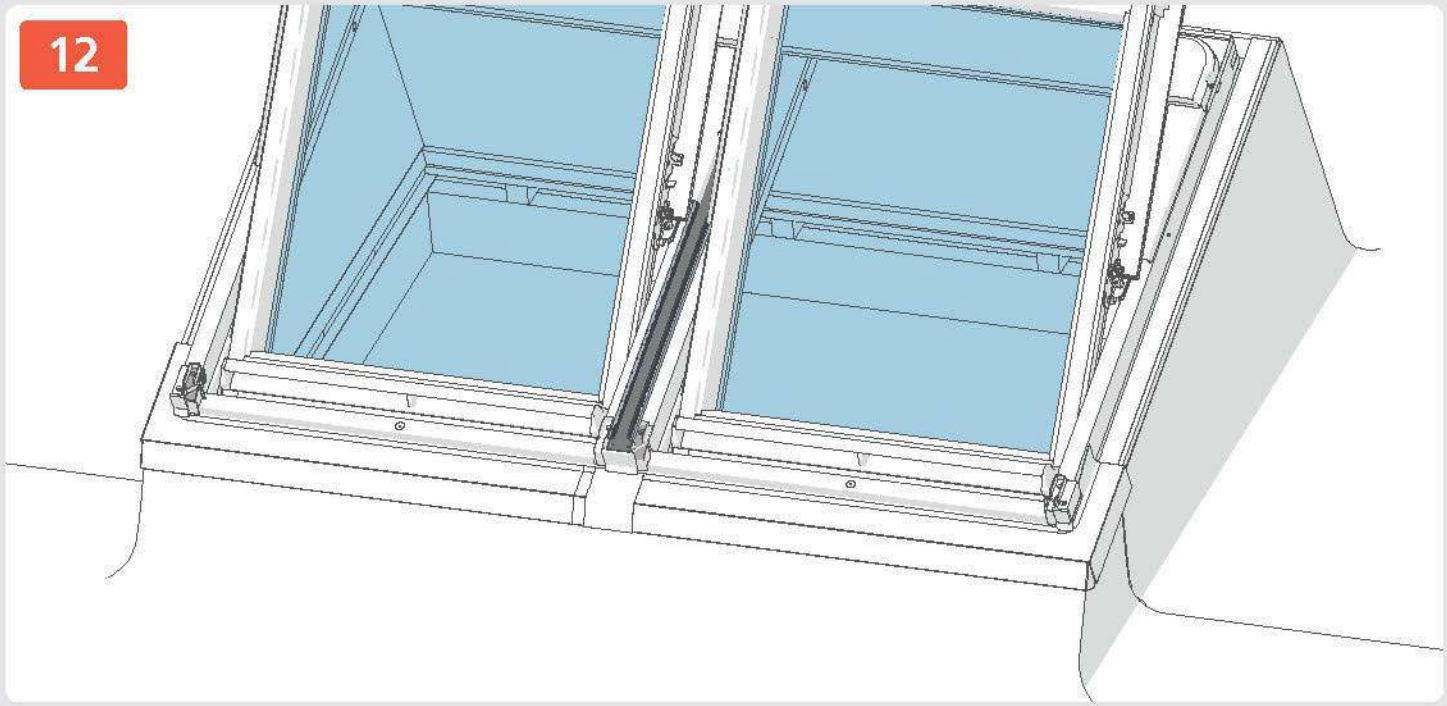

13

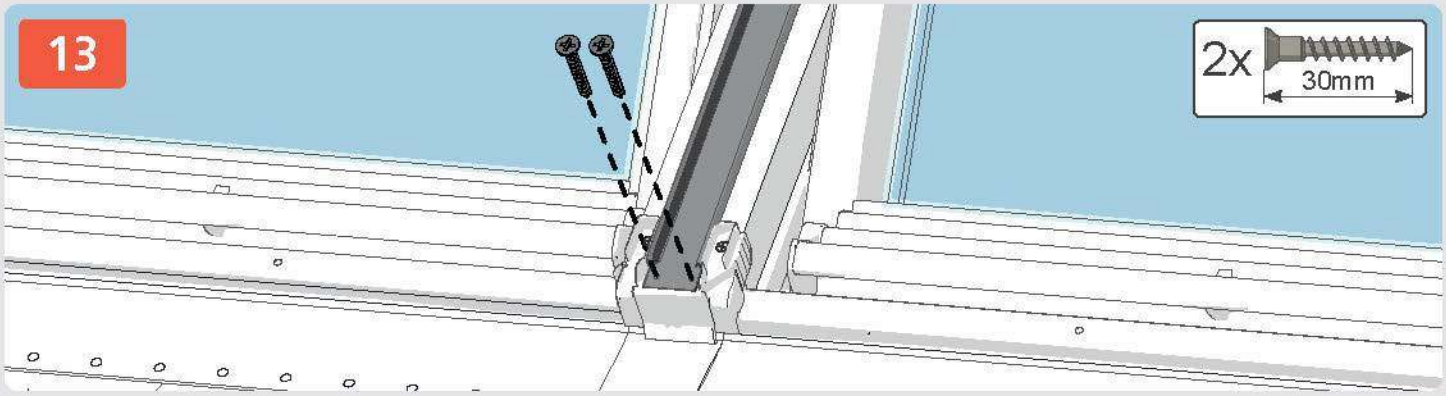

14

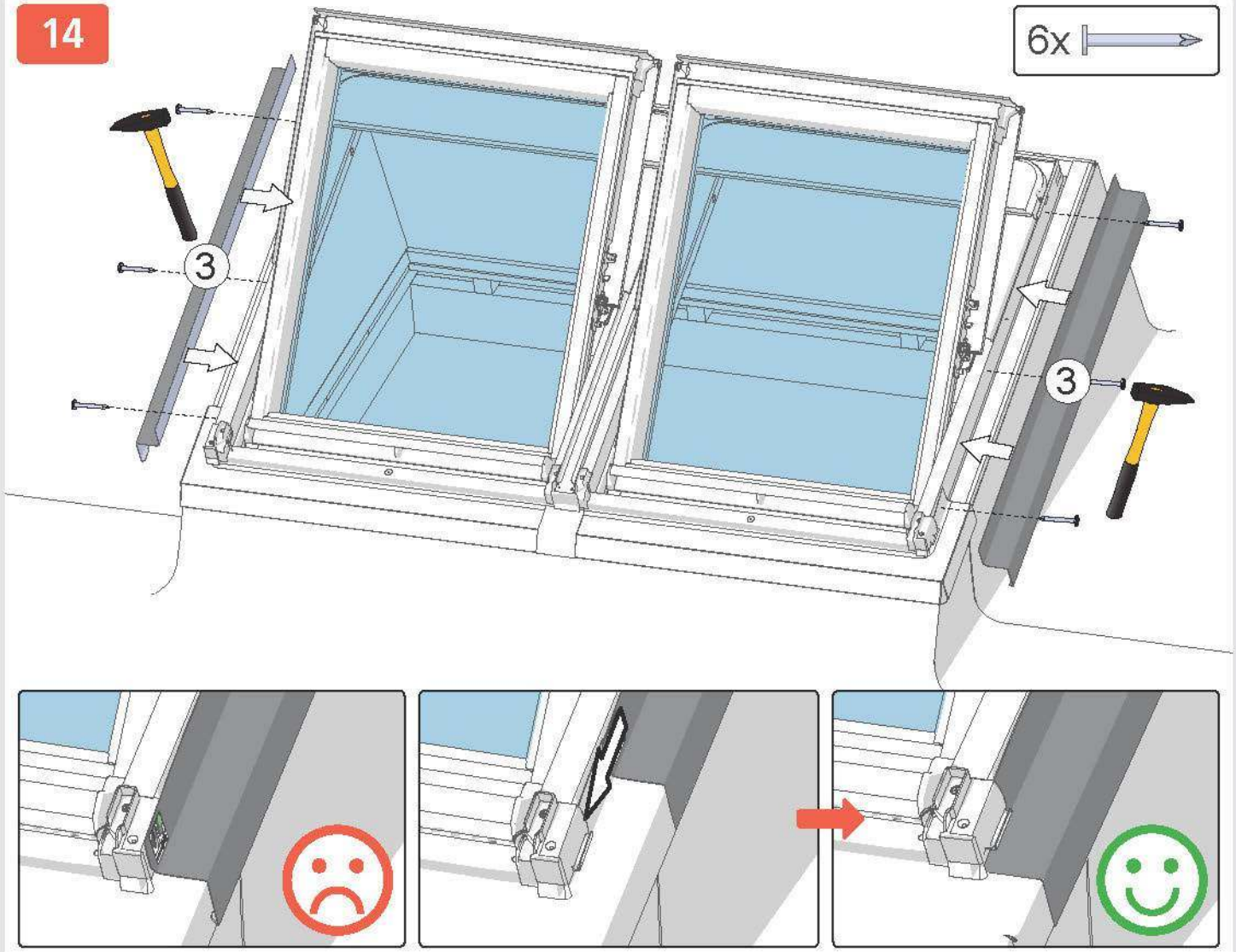

15

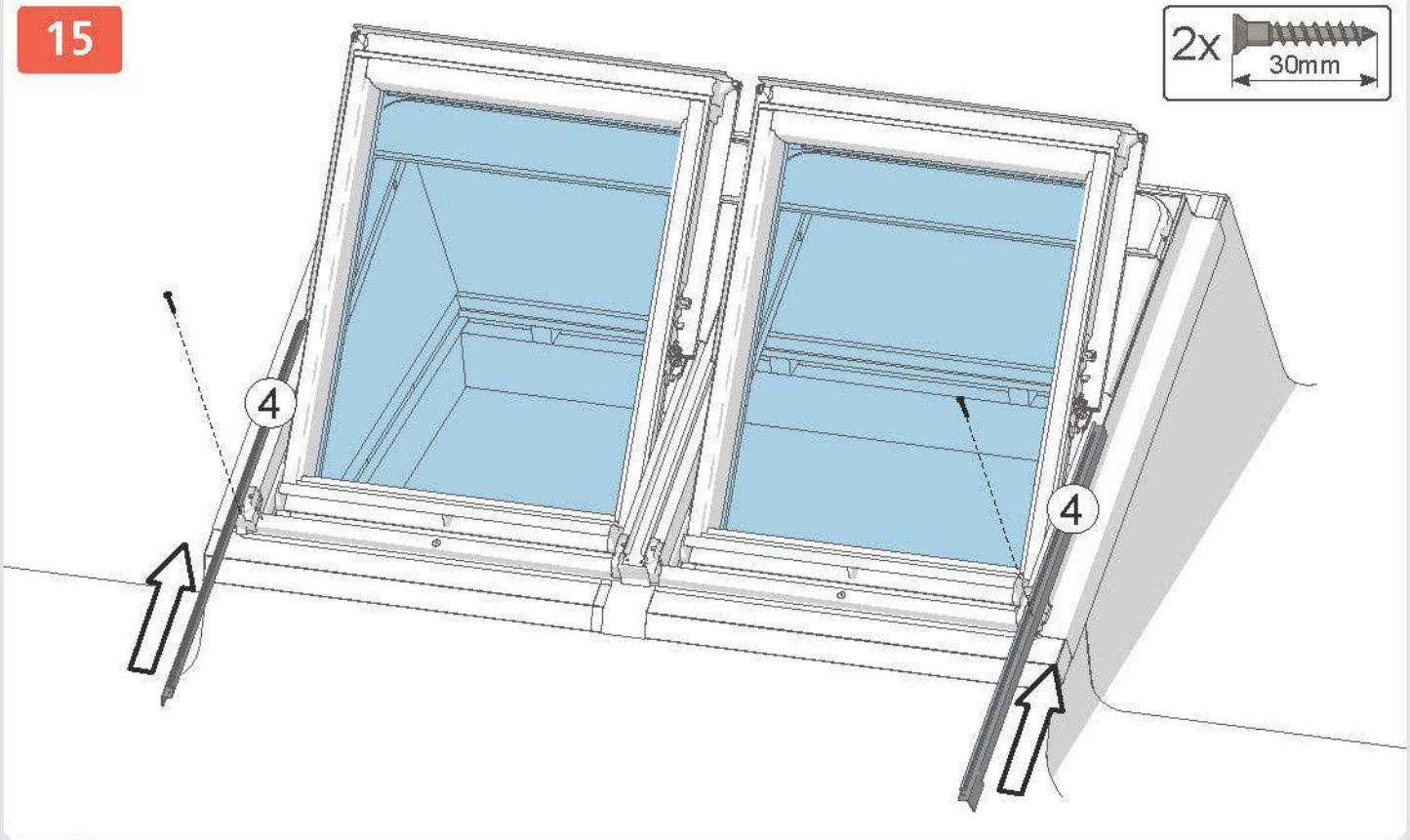

16

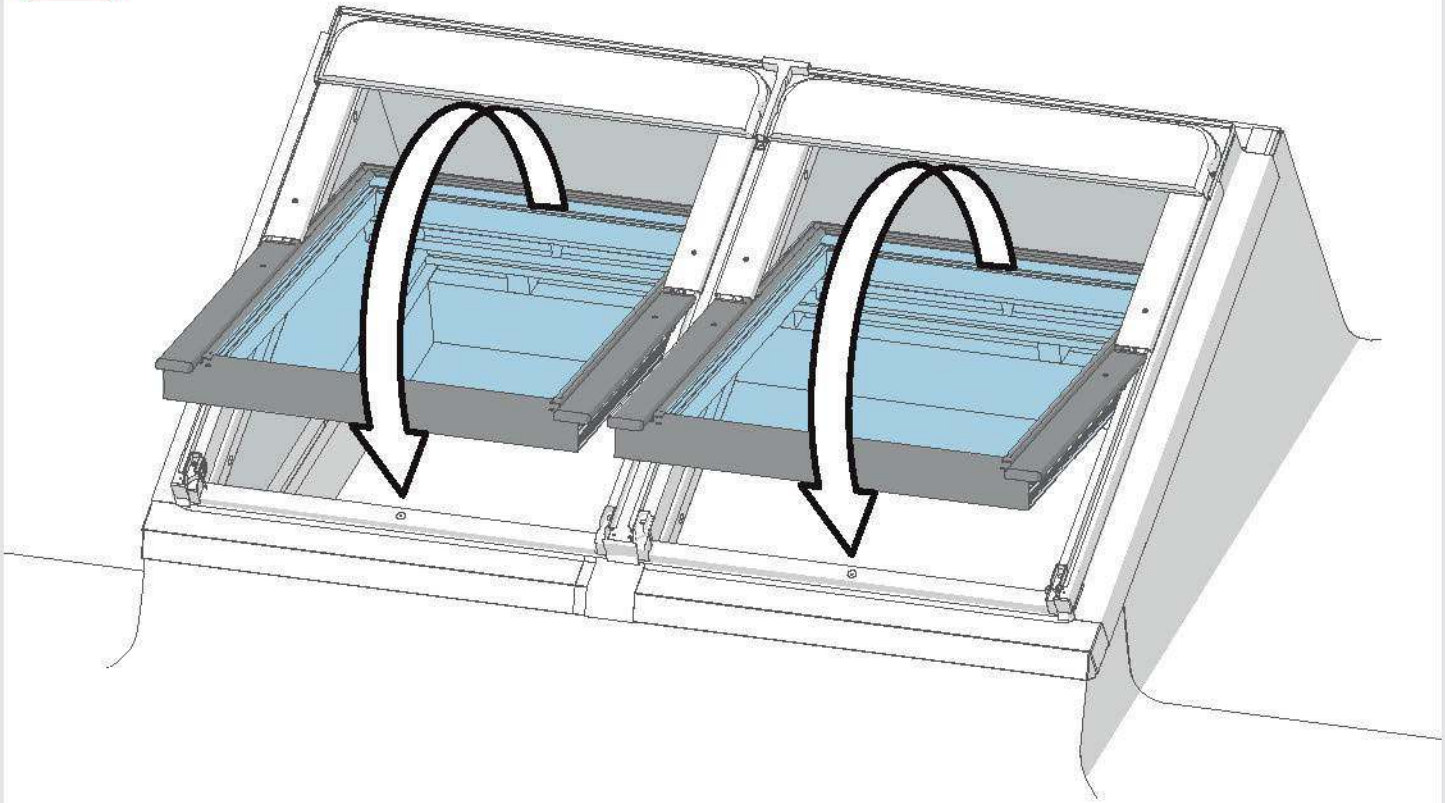

17

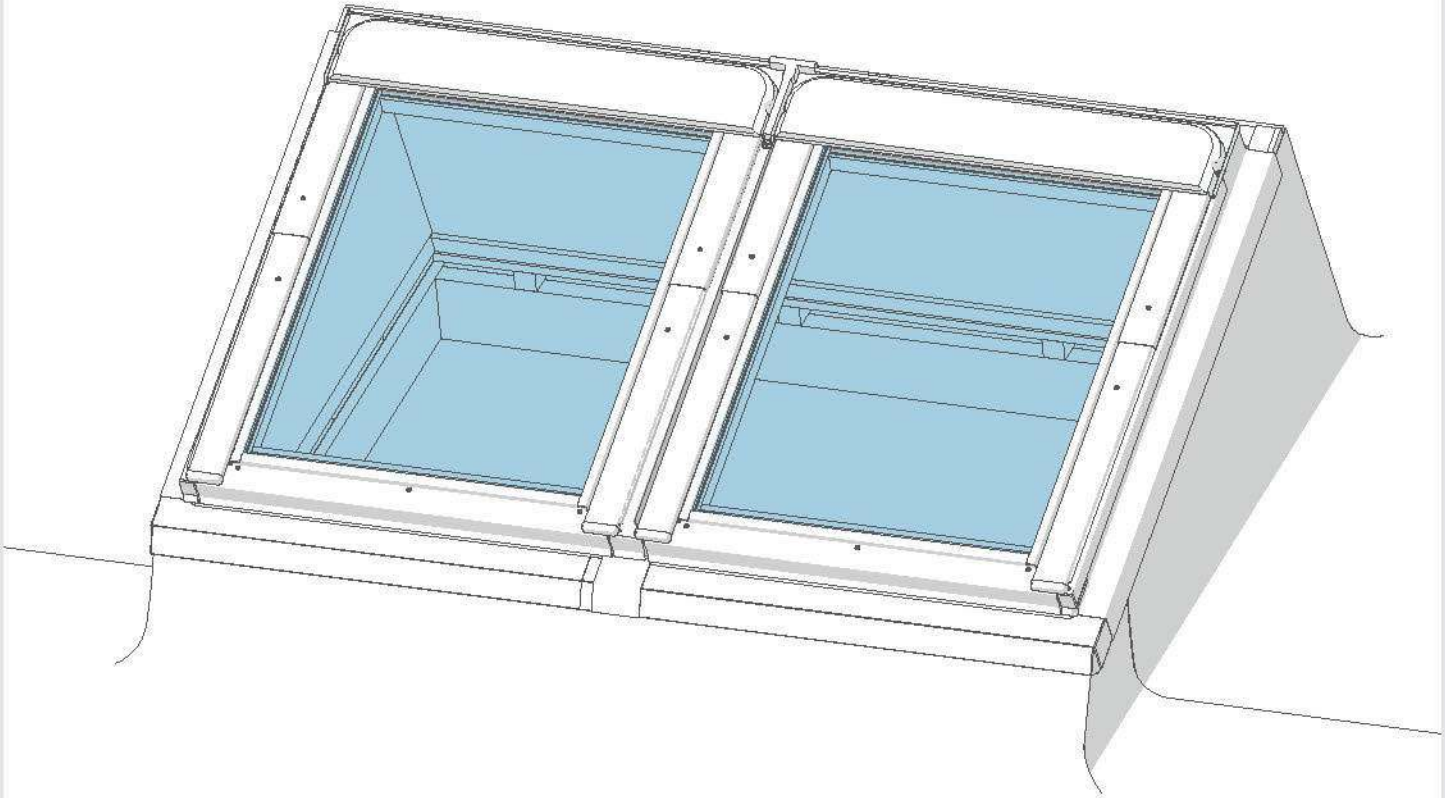

18

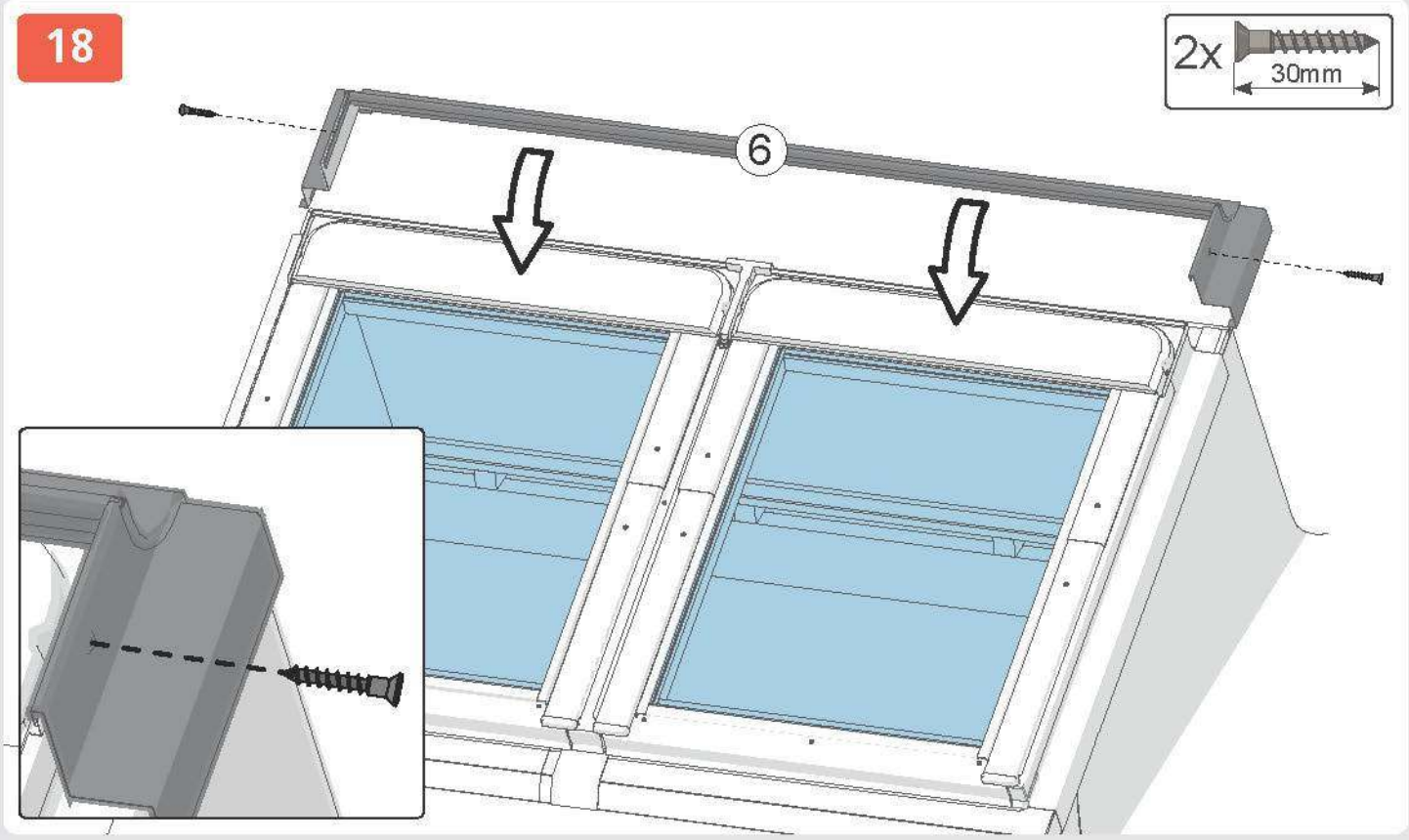

19

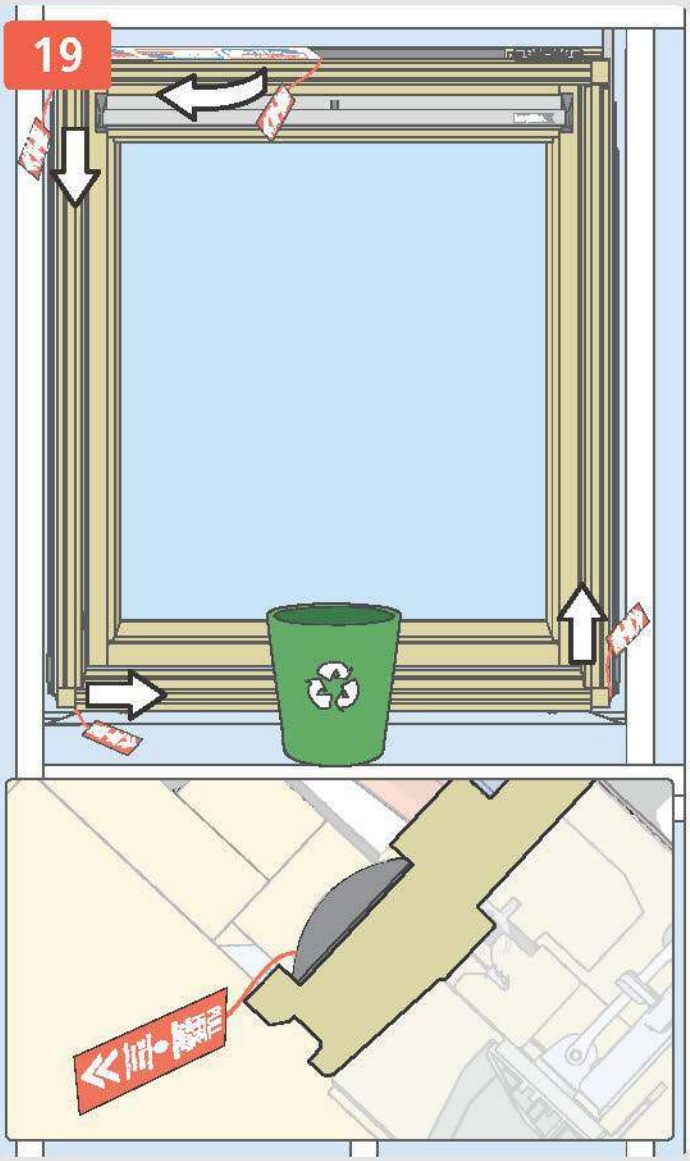

20

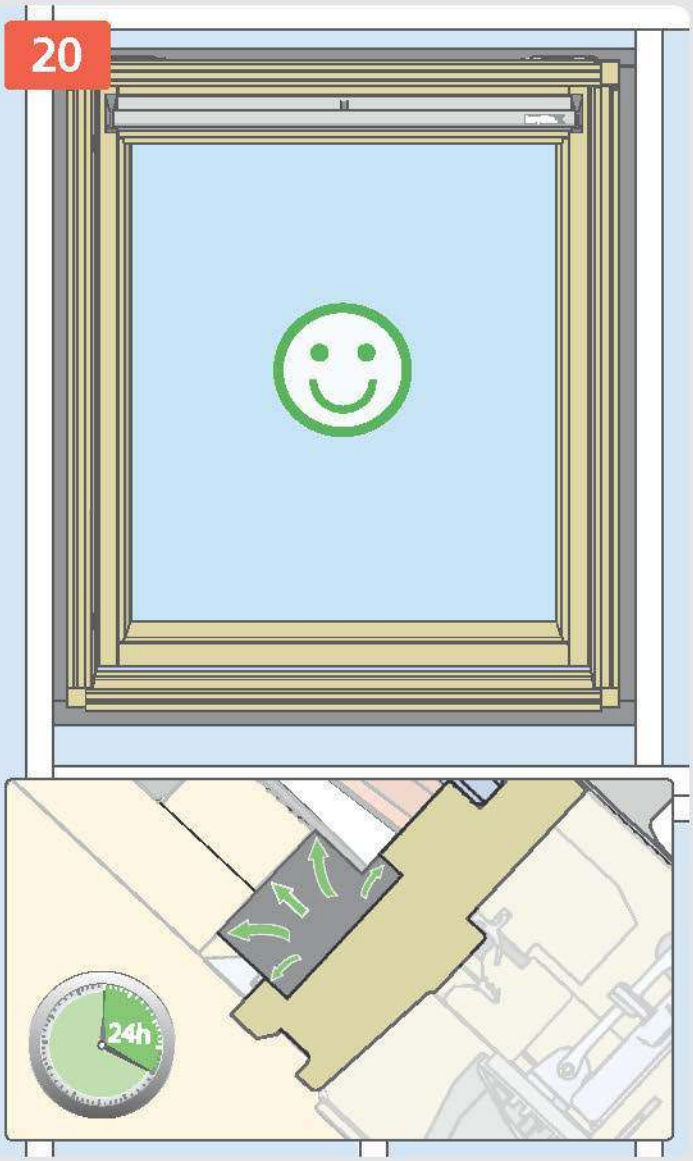

keylite.
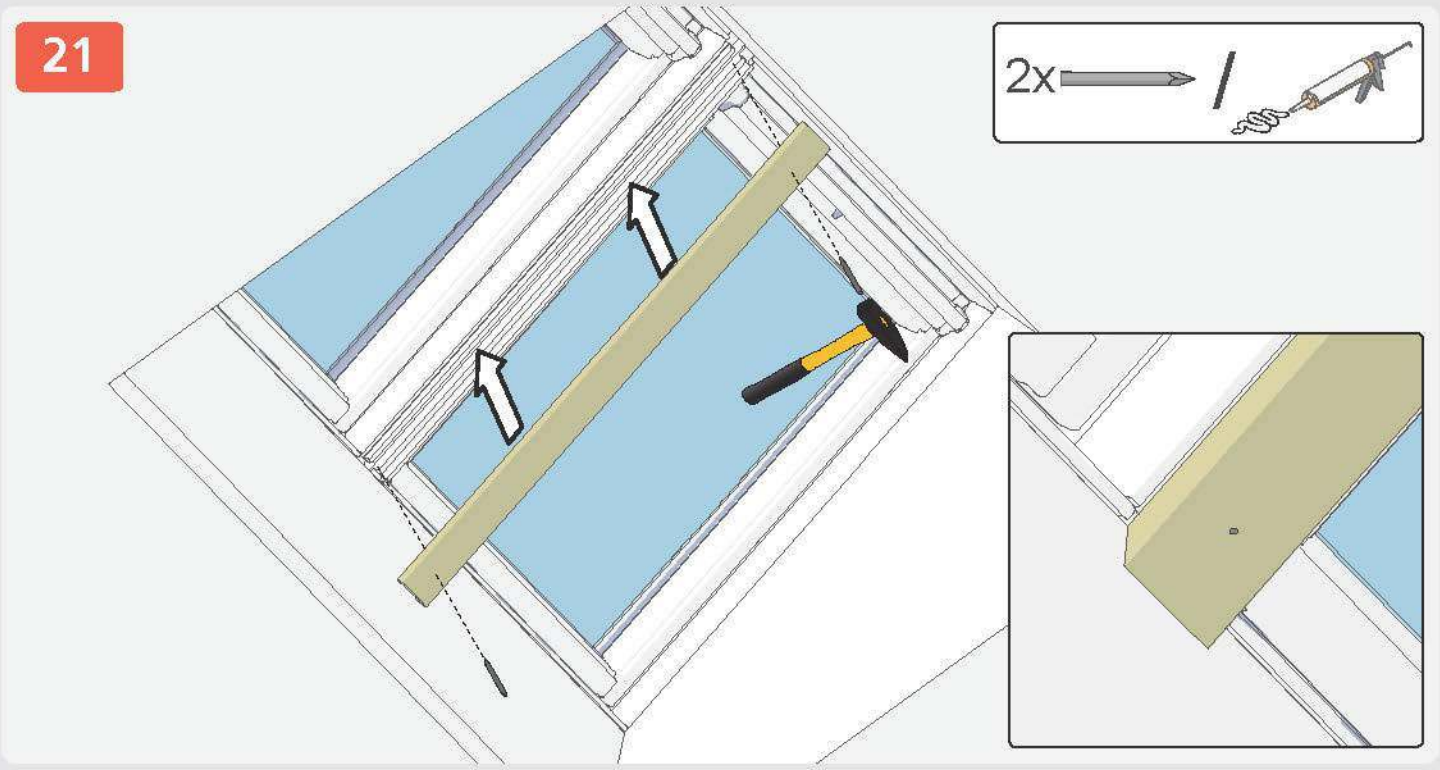
21